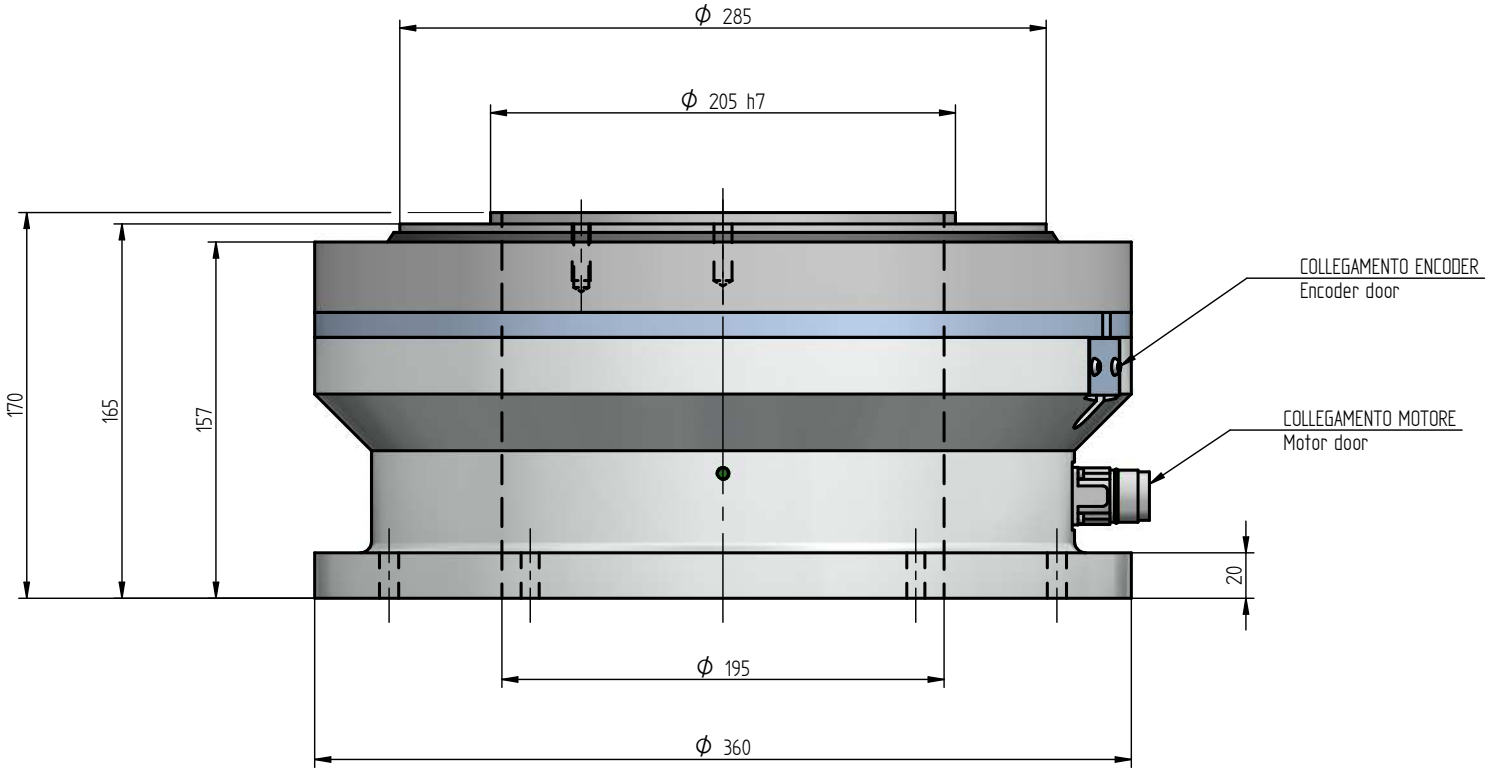
Φ 285
Φ 205 h7
170
165
157
COLLEGAMENTO ENCODER
Encoder door
COLLEGAMENTO MOTORE
Motor door
20
Φ 195
Φ 360

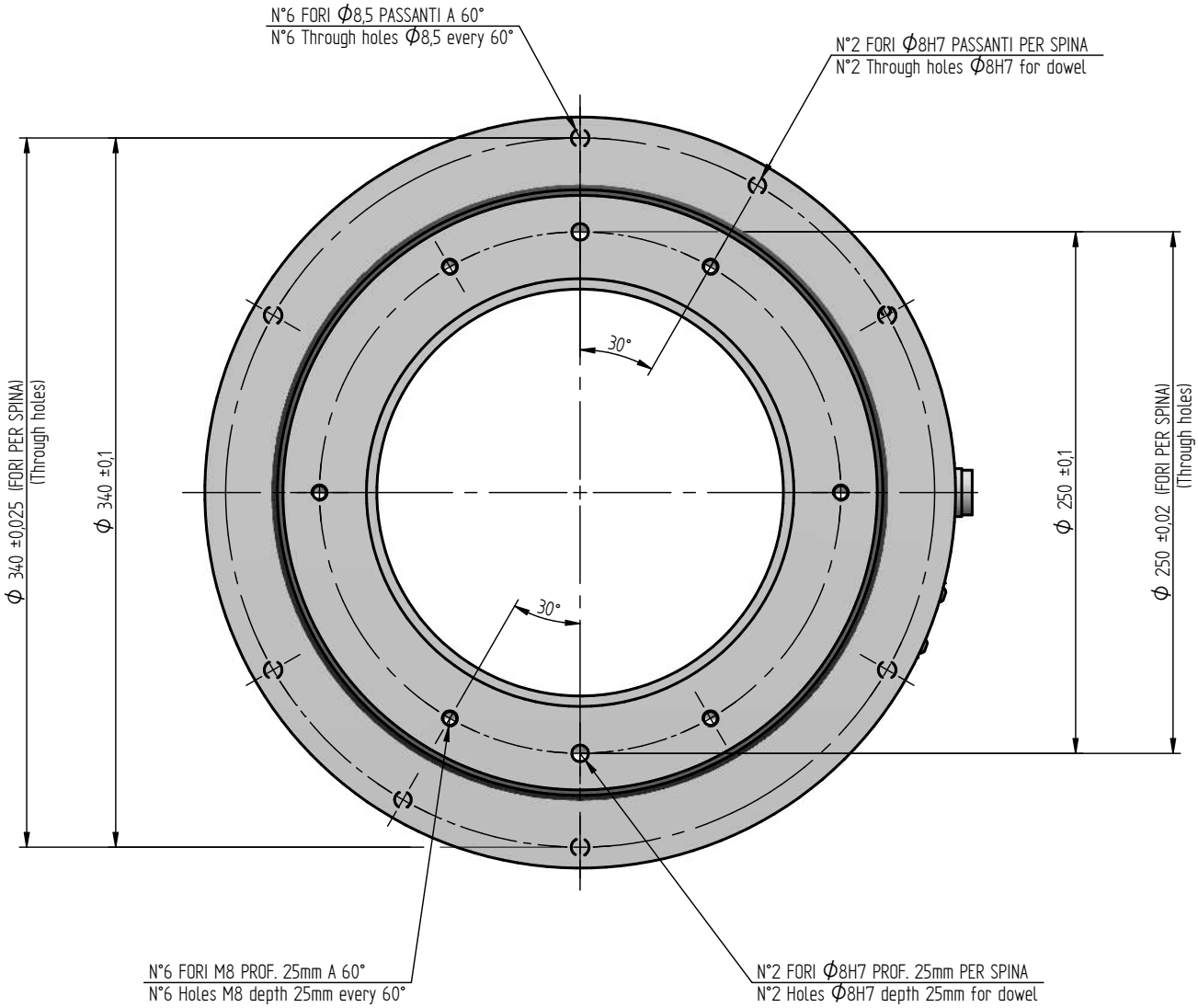
N°6 FORI Φ8,5 PASSANTI A 60°
N°6 Through holes Φ8,5 every 60°
N°2 FORI Φ8H7 PASSANTI PER SPINA
N°2 Through holes Φ8H7 for dowel
30°
30°
Φ 340 ±0,025 (FORI PER SPINA)
(Through holes)
Φ 340 ±0,1
Φ 250 ±0,1
Φ 250 ±0,02 (FORI PER SPINA)
(Through holes)
N°6 FORI M8 PROF. 25mm A 60°
N°6 Holes M8 depth 25mm every 60°
N°2 FORI Φ8H7 PROF. 25mm PER SPINA
N°2 Holes Φ8H7 depth 25mm for dowel